World Journal of Advanced Research and Reviews
eISSN: 2581-9615 CODEN (USA): WJARAI
Cross Ref DOI: 10.30574/wjarr
Journal homepage: https://wjarr.com/

(Research Article)

Application of Kansei Engineering Method and Quality Function Deployment (QFD) in Designing Motorcycle-Based Ride-Hailing Backrest

Hening Sekar Maisari [1], Syaidah Nabillah [1], Ratna Purwaningsih [1,*] and Ade Aisyah Arifna Putri [2]

[1] *Department of Industrial Engineering, Faculty of Engineering, Diponegoro University, Semarang, Central Java, Indonesia.*
[2] *Department of Industrial Engineering, Faculty of Engineering, Sebelas Maret University, Surakarta, Central Java, Indonesia.*

World Journal of Advanced Research and Reviews, 2025, 26(03), 998-1014

Publication history: Received on 27 March 2025; revised on 05 June 2025; accepted on 07 June 2025

Article DOI: https://doi.org/10.30574/wjarr.2025.26.3.2249

Abstract

The development of a passenger backrest for motorcycle-based ride-hailing services is a vital innovation to enhance both comfort and safety, with a particular focus on female users. This study utilizes Kansei Engineering to capture the emotional and ergonomic needs of passengers, complemented by Quality Function Deployment (QFD), to transform these needs into actionable product specifications. By integrating anthropometric data specific to Indonesian women, the resulting design aims to provide optimal stability and comfort during travel. The analysis using the House of Quality (HoQ) framework prioritizes key attributes such as material strength, ergonomic dimensions, and cushion thickness, which are critical for user satisfaction. Despite its strengths, the study acknowledges limitations, including a small respondent sample and the exclusion of cost considerations from the design process. To address these gaps, future research is encouraged to include large-scale field trials, cost analysis, and the exploration of sustainable materials. The proposed design offers a promising solution to enhance passenger experience, reduce travel-related discomfort, and mitigate safety risks. This study underscores the potential of integrating Kansei Engineering and QFD methodologies to create user-centric innovations that can significantly contribute to the transportation industry's development.

Keywords: Product Design; Seat Backrest; Kansei Engineering; QFD; Anthropometry

1. Introduction

The development of digital technology has led to innovations in various sectors, one of which is transportation. The emergence of online Motorcycle-Based Ride-Hailing as an alternative to public transportation has had a significant impact on people's lives. Motorcycle-based ride-hailing is the leading choice of urban communities as a practical and fast mode of transportation. This is proven by the increasing number of motorcycle-based ride-hailing users, such as data released by a survey institute, “Good Stats.” until 2023, when motorcycle-based ride-hailing users in Indonesia reached more than 21 million people. Accessibility, flexibility, and the ability to penetrate traffic jams make Motorcycle-Based Ride-Hailing a practical transportation solution, especially in big cities with high mobility, especially for students, office employees, and tourists. As cited by Hanan et al. (1), based on Top Brand data in 2024, the most widely used Motorcycle-Based Ride-Hailing platform is Gojek, as shown in Table 1. As the popularity of Motorcycle-Based Ride-Hailing continues to increase, there is also a need for better comfort and safety for passengers, especially for women who may have detailed preferences regarding privacy and security during their ride.

* Corresponding author: Ratna Purwaningsih.

Copyright © 2025 Author(s) retain the copyright of this article. This article is published under the terms of the Creative Commons Attribution License 4.0.

Table 1 Motorcycle-Based Ride-Hailing Users Data in Indonesia

Brand	2020	2021	2022	2023	2024
Gojek	47.30%	53.00%	54.70%	55.00%	62.00%
Grab	43.50%	39.70%	36.70%	35.30%	31.60%
Maxim	-	-	-	-	2.80%
Et Cetera (ETC)	9.20%	7.30%	8.60%	9.70%	3.60%

Several studies indicate that passengers of motorcycle-based ride-hailing services are predominantly female compared to male passengers. Additionally, users of these services often express concerns regarding their safety and security when traveling with unfamiliar individuals. A study conducted by Siddiq and Taylor (2) revealed that women are more likely than men to use motorcycle-based ride-hailing services for commuting or household-related travel. Their findings highlighted those respondents expressed specific safety concerns, emphasizing the need for better monitoring, more frequent services, easier incident reporting systems, and non-police security patrols in areas associated with ride-hailing services. Safety considerations are a critical factor for consumers when choosing online transportation services (3).

Accidents involving motorcycle-based ride-hailing services occur frequently, as motorcycles are inherently more vulnerable to accidents than cars. According to data from the Integrated Road Safety Management System (IRSMS) of the Indonesian National Police Traffic Corps (*Korlantas Polri*), 79,220 traffic accidents were recorded as of August 5, 2024, with 76.42% involving two-wheeled vehicles. One seemingly minor but impactful factor affecting road safety is the presence of speed bumps. According to Indonesia's Ministry of Transportation Regulation No. PM 14 of 2021 on Traffic Control and Safety Devices, speed bumps must be constructed from road materials, rubber, or other materials with similar performance, with a height of 5–9 cm, a total width of 35–39 cm, a maximum slope of 50%, and a color combination of yellow or white and black with dimensions of 25–50 cm. However, many speed bumps fail to meet these specifications, resulting in accidents involving two-wheeled vehicles, often caused by speed bumps that are excessively high or steep.

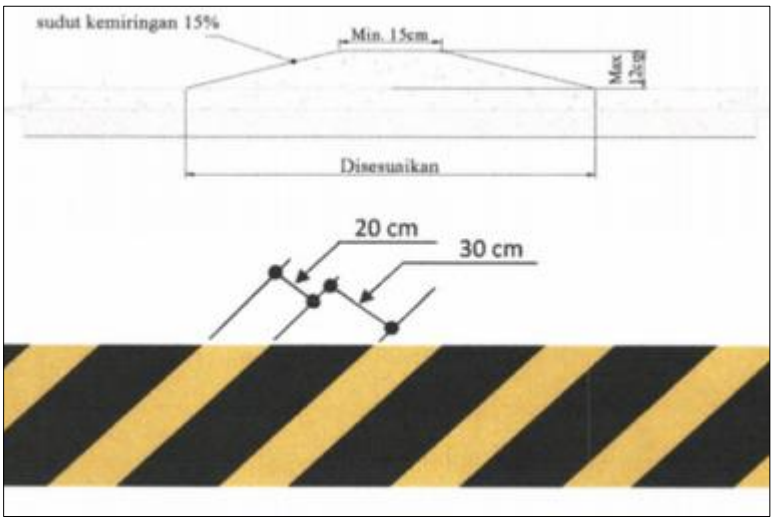

Figure 1 Speed Bump Specification

According to a report from one of Indonesia's national media outlets, Kompas (4), on May 19, 2023, a motorcycle accident occurred in the Ahmad Yani area, Nganjuk. The incident was caused by an unmarked and excessively high-speed bump, which forced the motorcyclist to brake suddenly, leading to a fall. Furthermore, Republika (5) reported another motorcycle accident on December 25, 2021, in the Pondok Aren area. In this case, the motorcyclist lost control while crossing a speed bump, resulting in injuries. The rider suffered a laceration on the forehead and abrasions on the hands, while the passenger tragically passed away due to head injuries and chest trauma.

Given the serious consequences caused by non-standard speed bumps, particularly for two-wheeled vehicle riders and passengers who are more vulnerable to accidents, this study aims to design a passenger backrest for motorcycle-based

ride-hailing services. A backrest design that provides sufficient support stability and enhances passenger safety—especially for women is urgently needed. Beyond safety, comfort and privacy are also primary concerns for female passengers, who often feel the need to maintain distance or privacy from the driver during rides. Currently, passenger seats in motorcycle-based ride-hailing services typically lack adequate backrests, making them less comfortable, particularly for extended trips or navigating through dense traffic. Thus, a specially designed backrest tailored to women's needs could offer a safer and more comfortable riding experience.

Using Kansei Engineering and Quality Function Deployment (QFD) methods, the design process considers aspects of safety, ergonomics, emotional connection, and functionality, with the aim of addressing passenger needs. According to Nagamachi (6), Kansei Engineering is a design approach that translates users' emotional needs and feelings into product characteristics. This method allows design elements to be customized to enhance user experience and satisfaction. In the context of backrests for motorcycle-based ride-hailing services, Kansei Engineering enables researchers to identify Kansei words that reflect feelings of safety, comfort, and protection for female passengers, which are then incorporated into the design.

The QFD method (Quality Function Deployment) will also be applied in this research to ensure that consumer needs are accurately translated into the product's technical specifications (7). QFD ensures that every aspect of user requirements, particularly those related to safety and comfort, is addressed in the final design. By combining Kansei Engineering and QFD, this study aims to develop a backrest design that not only meets female passengers' emotional needs but also achieves optimal technical specifications. This innovation is expected to contribute positively to the transportation and manufacturing industries by enhancing the quality of services provided by motorcycle-based ride-hailing companies.

The recommendations from this research are expected to directly benefit motorcycle-based ride-hailing companies and motorcycle accessory manufacturers by improving passenger safety and comfort, particularly for female passengers.

This study focuses on designing a motorcycle passenger backrest for ride-hailing services to create a safer, more comfortable, and enjoyable travel experience for passengers. According to IDN Times (8), the Honda Beat is one of the most commonly used motorcycles in motorcycle-based ride-hailing services due to its affordability and fuel efficiency. Consequently, the Honda Beat will serve as the reference vehicle for this study. Through the Kansei Engineering and QFD approaches, the study seeks to improve the specifications of existing backrest designs by incorporating aspects of safety, ergonomics, emotional appeal, and functionality. The results of this research are anticipated to provide direct benefits to motorcycle-based ride-hailing companies and contribute positively to traffic safety improvements.

2. Material and methods

2.1. Kansei Engineering

Kansei Engineering was first introduced in the 1970s in Japan (6). This method of product development focuses on translating customers' feelings, impressions, and emotions into specific design parameters. The term Kansei in Japanese refers to emotions or feelings, making the central focus of Kansei Engineering the conversion of consumers' emotional aspects into corresponding product characteristics. Kansei Engineering has been applied in various industries, ranging from automotive to electronics, to create products that are not only functional but also deliver a satisfying user experience (6).

In the context of designing passenger backrests for female users of motorcycle-based ride-hailing services, Kansei Engineering will be utilized to identify the emotional needs and preferences of female passengers, such as feelings of safety, comfort, and privacy. This approach is crucial, as emotional factors often take precedence for users, particularly concerning comfort and security, which have yet to be fully addressed in the current design of motorcycle passenger seats (9).

The Kansei Engineering process typically involves several key steps, including the identification of Kansei words, mapping user perceptions, and translating these words into the technical characteristics of a product. Kansei words are terms or phrases that represent users' feelings about a product, such as "safe," "comfortable," "protected," or "private." These words are then converted into design elements that are expected to meet users' expectations. Previous studies have demonstrated that Kansei Engineering can enhance user satisfaction with a product, including in the design of vehicle seating.

2.2. Quality Function Deployment (QFD)

In addition to Kansei Engineering, the Quality Function Deployment (QFD) method is also utilized to help interpret user needs into product technical specifications. QFD is a systematic approach to understanding user needs and preferences and then translating them into more specific product design components. In the context of a female passenger backrest, QFD can assist in formulating appropriate technical specifications, such as safe materials, ergonomic shapes, and additional features that enhance privacy (7). According to Maritan D. (10), there are four phases in product development:

- Product Concept: This involves anticipating future customer satisfaction (initial technical targets, design style, projected customer needs, and preliminary process feasibility).
- Product Planning: This focuses on determining product functions (selection of principal components and mechanical prototypes, process feasibility, mock-ups, design style, cost targets, and initial technical analysis).
- Product Design: This phase outlines product structures (detailed design, component design, detailed prototypes, and functional testing).
- Process Design: This represents the production process (trial production lines and prototype vehicles).

This study is limited to the third phase as it only addresses product prototyping and does not include production process design. According to a study by Dolgun & Köksal (11), integrating Kansei Engineering and QFD in product design has proven effective in fulfilling users' emotional and technical needs, as the two methods complement each other. QFD enables the emotional needs identified through Kansei Engineering to be translated into measurable technical components, ensuring the product can be implemented more effectively.

Based on the methodology by Wirahata C. et al. (12), the design process involves the following steps:

2.2.1. Consumer Identification

The initial stage is identifying the target market for the motorcycle-based ride-hailing backrest product. Consumer needs and expectations are gathered through a questionnaire survey. The first questionnaire is prepared by identifying the primary characteristics of motorcycle-based ride-hailing backrests, which are then formulated into Kansei words—keywords reflecting consumer emotions and needs.

2.2.2. Completion of The First Questionnaire and Data Analysis

Respondents are asked to evaluate the Kansei words using a semantic differential scale. The collected data are analyzed through various tests, including purposive sampling for sample selection, validity tests using the Pearson method, and reliability tests using Cronbach's Alpha. The identified characteristics are grouped into eight quality dimensions, with an additional safety dimension. This process helps identify the most critical characteristics in each dimension.

2.2.3. Benchmarking and Preparation of The Second Questionnaire

Based on the results of the first questionnaire, benchmarking is conducted to compare the motorcycle-based ride-hailing backrest product with existing products on the market. The most important characteristics from each quality dimension and the benchmarking results serve as the basis for the second questionnaire. In this questionnaire, respondents are asked to evaluate their expectations (importance level) and perceptions (satisfaction level) of the primary backrest product and its competitors using a Likert scale. This second questionnaire aims to identify gaps between the current product and consumer needs, guiding the preparation of a planning matrix in the House of Quality (HOQ).

2.2.4. Analysis of The Second Questionnaire and Gap Values

Data from the second questionnaire is re-tested for validity and reliability. After the data are deemed valid and reliable, gap values are calculated for each characteristic by subtracting the average perception score (satisfaction) from the average expectation score (importance). A positive gap value indicates that the attribute meets consumer expectations, while a negative gap value indicates otherwise. These gap values are used to compare the quality of the primary motorcycle-based ride-hailing backrest product with its competitors and prioritize the aspects of quality that require improvement.

2.2.5. Development of The House of Quality (HoQ)

The next step involves developing the HOQ, starting with a customer needs and benefits matrix, which contains consumer needs prioritized based on the semantic differential scale from the first questionnaire. This is followed by a

planning matrix that includes consumer importance and satisfaction data, target levels, improvement ratios, raw and normalized weights, and satisfaction comparisons between the primary product and competitors. The planning matrix is developed based on the results of the second questionnaire.

2.2.6. Preparation of The Technical Response Matrix

In this stage, consumer needs and expectations are translated into technical parameters that the company can implement. The outcome of this phase of the HOQ is not product design specifications but technical features and characteristics that address consumer needs. Technical data are gathered through interviews and site observations. A relationship matrix is created to show the link between customer needs and technical responses, followed by a technical correlation matrix to highlight interactions among technical responses. Finally, a technical matrix prioritizes technical responses by their absolute and relative importance, as well as their priority rankings.

2.2.7. Final Stage and Product Development Implementation

After completing all HOQ matrices through the three phases, the company has a solid foundation for product development that aligns with consumer needs and expectations. This process is expected to help create a more competitive and satisfying motorcycle-based ride-hailing backrest product.

2.3. Eight Quality Dimensions

According to Garvin (13), the eight dimensions of quality provide a framework for evaluating product quality from multiple perspectives. In this study, these quality dimensions are integrated with the concept of Kansei Engineering. Specifically, the emotional design elements in Kansei Engineering are categorized under the eight quality dimensions to understand better the factors influencing perceptions of product quality.

The first dimension, performance, refers to how well the product delivers comfort and adequate physical support during travel. An example is the stability of the design, which strongly correlates with good performance and directly affects the sense of safety and comfort experienced by female passengers (14). The second dimension, features, encompasses additional attributes that enhance the backrest's value, such as adjustable recline angles or detachable components. In Kansei Engineering, these features are tailored to meet the emotional needs of users, ensuring comfort and protection during rides (15). However, reliability emphasizes the importance of a backrest that remains safe and dependable during use. As highlighted by Garvin (13), strong reliability fosters customer trust in the product's ability to deliver a stable riding experience without failure.

An essential aspect of the backrest design is conformance, which measures whether the product adheres to appropriate safety and ergonomic standards for female passengers. In Kansei Engineering, conformance involves meeting emotional needs for a safe and comfortable product, aligning with the standards set by the Society of Human Factors and Ergonomics (16). Conversely, the durability dimension evaluates how long the product can function effectively. In Kansei Engineering, durability is associated with perceptions of quality and safety, where robust designs and high-quality materials enhance users' sense of security (13). Additionally, the ease of maintenance, or serviceability, pertains to how easily the backrest can be cleaned and maintained. A product that is simple to maintain enhances customer satisfaction as it allows users to preserve cleanliness and comfort with minimal effort.

Quality perception also relies heavily on aesthetics. In Kansei Engineering, aesthetics refers to how the appearance, color, and shape of the backrest attract attention and appeal to passengers. A sleek, contemporary design can leave a positive impression and make passengers feel valued (15). Finally, perceived quality reflects passengers' overall impression of the backrest. In Kansei Engineering, improving perceived quality involves delivering safety and comfort that meet or exceed user expectations, creating a satisfying experience (13).

2.4. Safety Aspects

The safety aspect encompasses how a product can protect users from hazards or injuries during travel. This dimension is particularly crucial for motorcycle-based ride-hailing users, who may be vulnerable to the risk of falling. In Kansei Engineering, feelings of comfort and protection during use are directly associated with safety. A backrest with supportive safety features, i.e., an ergonomic design that keeps passengers stable, anti-slip materials, and impact-absorbing padding, can enhance the user's sense of security.

According to Garvin (1987), users' perception of safety can also influence their overall view of a product. Therefore, safety should be regarded as an independent factor that impacts their decision to use the product and their level of

satisfaction. By incorporating safety as a distinct element, it demonstrates that the product design not only meets comfort and aesthetic requirements but also addresses the need for physical protection.

2.5. Anthropometry Aspects

Anthropometry is a discipline that studies the measurements and proportions of the human body, playing a crucial role in ensuring that designed products align with users' physical characteristics. By utilizing anthropometric data, the design of a backrest can be tailored to ensure comfort, safety, and suitability for users' body dimensions. Incorporating anthropometric principles is especially valuable when designing backrests for motorcycle-based ride-hailing passengers, particularly female passengers.

Anthropometric considerations can assist in determining the ideal dimensions for the backrest, such as its height, width, and depth, as well as the placement of cushioning. Employing anthropometric data in product design is highly effective in meeting users' physical needs, minimizing body strain, and preventing discomfort (14). For instance, the backrest height should match the average torso length, and its width should adequately support the user's back to ensure stability and safety during the ride. Anthropometric data specific to female passengers is critical, as they typically have different body features compared to male passengers, such as torso length and shoulder width. Therefore, tailoring the dimensions of the backrest to suit the physical proportions of female users can significantly enhance safety and comfort. Anthropometry-based design improves user comfort and increases the perceived value of the product, making it more appreciated by users.

The anthropometric data used in this study were sourced from the antropometriindonesia.org website. By using data specifically representing Indonesian females, the design of the motorcycle-based ride-hailing backrest can be adjusted to accommodate the majority of Indonesian women. This customization is expected to enhance both comfort and safety in the overall design.

3. Results and discussion

The first step in this study involved identifying Kansei words that represent the emotional needs of female consumers for a motorcycle-based ride-hailing passenger backrest product. This was achieved through a literature review and observation of products already available on the market. From this process, 44 Kansei words were identified and categorized into eight quality dimensions, including a safety dimension. The Kansei words for the motorcycle-based ride-hailing female passenger backrest product are presented in Table 2.

Those Kansei words were then evaluated based on consumer and user preferences through a questionnaire utilizing a 7-point Likert scale. A total of 33 consumers participated as respondents in this questionnaire. The weight for each Kansei word was calculated using the following formula:

Weight = ∑ (respondents' responses for a given characteristic on the semantic differential scale) ……..(1)

The results of the calculations and the categorization of Kansei words into the eight quality dimensions, along with the safety dimension, are shown in Table 2.

Table 2 Kansei Words and Weighted Calculation Results for Female Passenger Seat Backrest in Motorcycle-Based Ride-Hailing

Quality Dimension	Kansei Word	Weight	Selected Kansei Word
Performance	Efficient	190	Strong
	Strong	196	
	Stable	193	
	Soft	186	
Features	Adjustable	160	Portable
	Portable	171	
	Foldable	157	

Quality Dimension	Kansei Word	Weight	Selected Kansei Word
	Modular	163	
	Multi-Functional	167	
Reliability	Reliable	194	Reliable
	Consistent	178	
	Durable	189	
	Shockproof	178	
	Flexible	160	
Conformance	Ergonomic	178	Standard-Compliance
	Standard-Compliant	182	
	Simple	182	
	Compact	175	
	Minimalist	176	
Durability	Weather-Resistant	171	Pressure-Resistance
	Rustproof	172	
	Pressure-Resistant	175	
Serviceability	Easy to Clean	177	Low-Maintenance
	Straightforward	167	
	Low Maintenance	181	
	Affordable	165	
Aesthetic	Elegant	168	Clean
	Sleek	167	
	Soft-Colored	165	
	Smooth Texture	176	
	Clean	188	
Perceived Quality	Exclusive	157	Professional
	Professional	185	
	Stylish	172	
	Sustainable	177	
Safety	Non-Slip	177	Safe to Use
	Body-Protecting	185	
	Safe to Use	195	
	Extra Protection	188	

The subsequent stage involved benchmarking existing motorcycle backrest products available in the market, as illustrated in Figure 2. Following this, a second questionnaire was designed and distributed to assess prospective users' expectation levels regarding various attributes of the motorcycle backrest. In this questionnaire, respondents were asked to evaluate their expectations for different product attributes using a 5-point Likert scale.

Figure 2 Competitor Products

This second questionnaire targeted female users of motorcycle-based ride-hailing services. A total of 54 respondents participated in the survey. The results consist of consumer data in a Likert scale format, reflecting their expectations for the proposed product design as well as for Competitor 1, Competitor 2, and Competitor 3.

The next step involved calculating the mean expectation value for each competitor's product using the following formula

$$Mean = \sum \frac{Likert\ scale\ value\ for\ expectection}{Number\ of\ respondents}$$

The calculation results of expectation values can be seen in Table 3.

Table 3 The Mean of consumer expectations and perceptions

Aspect/Characteristic	Mean Expectation Value			
	Expectation	**Competitor 1**	**Competitor 2**	**Competitor 3**
Strong	4.63	3.21	4.32	4.53
Portable	4.67	2.35	2.23	4.24
Reliable	4.32	2.54	4.45	4.27
Standard-Compliance	4.21	4.24	3.13	3.69
Pressure-Resistant	4.36	4.12	4.64	4.17
Low Maintenance	4.13	4.67	3.42	4.07
Clean	3.89	3.41	3.05	4.14
Professional	3.97	3.12	4.36	4.32
Safe to Use	4.63	2.23	4.74	4.16

The fourth stage involves calculating the gap value, which represents the difference between the expectations or desired outcomes of potential users and their perceptions of each aspect of a competitor's product. The gap value is calculated using Equation (3) below:

- Gap Value = Mean Perception Value – Mean Expectation Value … (3)

The calculation results, presented in Table 4, indicate that both positive and negative gap values exist. A positive gap value suggests that the product attributes meet consumer expectations, which is a favorable indicator. Conversely, a negative gap value implies that the attributes fall short of consumer expectations and require improvement. Based on the calculations, the majority of aspects or characteristics offered by existing products in the market exhibit negative gap values. Therefore, these aspects need to be addressed and improved.

Table 4 Gap Value

Aspect/Characteristic	Mean Expectation Value		
	Competitor 1	**Competitor 2**	**Competitor 3**
Strong	-1.42	-0.31	-0.1
Portable	-2.32	-2.44	-0.43
Reliable	-1.78	0.13	-0.05
Standard-Compliance	0.03	-1.08	-0.52
Pressure-Resistant	-0.24	0.28	-0.19
Low Maintenance	0.54	-0.71	-0.06
Clean	-0.48	-0.84	0.25
Professional	-0.85	0.39	0.35
Safe to Use	-2.4	0.11	-0.47

3.1. House of Quality (HoQ)

The fifth stage of this research involves developing a House of Quality (HoQ) to translate customer needs (customer requirements) into the technical specifications of the motorcycle seat backrest for motorcycle-based ride-hailing passengers. In this study, customer requirements were derived from the Kansei words with the highest weightings for each quality dimension identified in the previous process. The customer requirements for each design aspect are shown in Table 5 below. The HoQ aids the team in prioritizing customer needs, identifying relationships between these needs and technical characteristics, and ensuring the final product aligns with market expectations.

Table 5 Customer Requirements

Design Aspect	Customer Requirements
Strong	The backrest must be sturdy and capable of supporting weight effectively.
Portable	Easy to install, remove, and carry anywhere.
Reliable	Provides a sense of security and comfort during travel.
Standard-compliance	Simple, ergonomic design that meets safety standards and fits anthropometric dimensions.
Pressure-resistant	Able to withstand excessive pressure without damage.
Low Maintenance	Easy to clean and requires no special maintenance.
Clean	Made from stain-resistant materials that are easy to clean, ensuring hygiene.
Professional	Looks elegant and conveys a professional impression.
Safe to use	Free from sharp edges or elements that could potentially harm users.

This study utilizes a House of Quality (HoQ) analysis to evaluate customer needs and the technical characteristics of the motorcycle seat backrest for motorcycle-based ride-hailing passengers. The data collected includes customer requirements and functional requirements, which serve as the focus for product development. A total of nine customer needs were identified and rated on an importance scale of 1 to 5. Some of the primary customer needs with the highest importance ratings include “the backrest must be sturdy and capable of supporting weight effectively” and “provide a sense of security and comfort during travel” with a rating of 5, as well as “withstand excessive pressure without damage” and “be easy to install, remove, and carry anywhere” with a rating of 4. These findings indicate that customers prioritize the strength and durability of the backrest, followed by flexibility in usage.

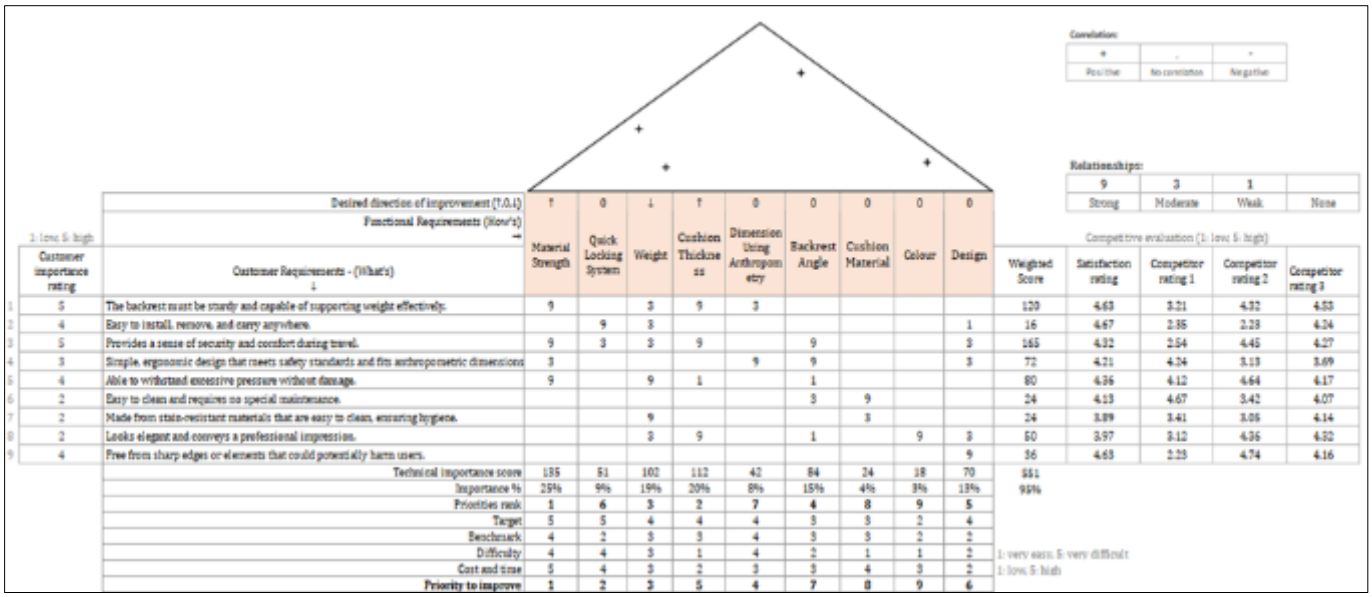

Correlation:

+	.	-
Positive	No correlation	Negative

Relationships:

9	3	1	
Strong	Moderate	Weak	None

	1: low, 5: high											Competitive evaluation (1: low, 5: high)			
		Desired direction of improvement (↑,0,↓)	↑	0	↓	↑	0	0	0	0	0				
		Functional Requirements (How's) →													
	Customer importance rating	Customer Requirements - (What's) ↓	Material Strength	Quick Locking System	Weight	Cushion Thickness	Dimension Using Anthropometry	Backrest Angle	Cushion Material	Colour	Design	Weighted Score	Satisfaction rating	Competitor rating 1	Competitor rating 2	Competitor rating 3
1	5	The backrest must be sturdy and capable of supporting weight effectively.	9		3	9	3					120	4.63	3.21	4.32	4.53
2	4	Easy to install, remove, and carry anywhere.		9	3						1	16	4.67	2.35	2.23	4.24
3	5	Provides a sense of security and comfort during travel.	9	3	3	9		9			3	165	4.32	2.54	4.45	4.27
4	3	Simple, ergonomic design that meets safety standards and fits anthropometric dimensions	3				9	9			3	72	4.21	4.24	3.13	3.69
5	4	Able to withstand excessive pressure without damage.	9		9	1		1				80	4.36	4.12	4.64	4.17
6	2	Easy to clean and requires no special maintenance.						3	9			24	4.13	4.67	3.42	4.07
7	2	Made from stain-resistant materials that are easy to clean, ensuring hygiene.			9				3			24	3.89	3.41	3.06	4.14
8	2	Looks elegant and conveys a professional impression.			3	9		1		9	3	60	3.97	3.12	4.36	4.32
9	4	Free from sharp edges or elements that could potentially harm users.									9	36	4.63	2.23	4.74	4.16
		Technical importance score	135	51	102	112	42	84	24	18	70	661				
		Importance %	25%	9%	19%	20%	8%	15%	4%	3%	13%	95%				
		Priorities rank	1	6	3	2	7	4	8	9	5					
		Target	5	5	4	4	4	3	3	2	4					
		Benchmark	4	2	3	3	4	3	3	2	2					
		Difficulty	4	4	3	1	4	2	1	1	2	1: very easy, 5: very difficult				
		Cost and time	5	4	3	2	3	3	4	3	2	1: low, 5: high				
		Priority to improve	**1**	**2**	**3**	**5**	**4**	**7**	**8**	**9**	**6**					

Figure 3 House of Quality (HoQ)

Nine technical parameters were identified to meet customer needs, including material strength, quick-locking system, weight, cushion thickness, anthropometric dimensions, backrest angle, cushion material, color, and design. The relationship between customer needs and technical parameters was evaluated using correlation weights (9: strong, 3: medium, 1: weak). Material strength demonstrated the strongest relationship with customer needs, particularly attributes like backrest sturdiness and pressure resistance. The technical parameter with the highest weight score was material strength (135), followed by anthropometric dimensions (112) and cushion thickness (102). This highlights that the primary focus of product development should be ensuring strong materials with ergonomic and anthropometrically appropriate dimensions.

The difficulty levels of developing each technical parameter were also analyzed. For instance, anthropometric dimensions were rated at a difficulty level of 4, indicating that their development is quite challenging but essential. A detailed anthropometric analysis is discussed in the subsequent section, aligning with customer needs for comfort and safety. Strong positive correlations (+) were found for parameters such as material strength, cushion thickness, and anthropometric dimensions, which directly address the primary customer requirements. No negative correlations (-) were found, suggesting that all technical parameters contribute to fulfilling customer needs without conflicts between them.

Based on the House of Quality analysis, the product development recommendations are as follows

- Focus on material strength, as this parameter has the highest importance weight (25%) and a strong relationship with key customer needs.
- Optimize anthropometric dimensions to enhance user comfort and safety despite the challenges in implementation.
- Improve the quick-locking system to compete with market alternatives that excel in this feature.
- Reduce product weight for increased practicality without compromising strength and durability.

The House of Quality analysis provides a structured overview of product development priorities for the motorcycle-based ride-hailing passenger seat backrest. Material strength, anthropometric dimensions, and cushion thickness emerge as the primary focus of development. By implementing the recommendations, the product is expected to meet customer needs better and improve competitiveness in the market.

3.2. Anthropometry Aspect

In this study, anthropometric aspects are utilized to ensure that the passenger backrest design for motorcycle-based ride-hailing services aligns with the physical characteristics of Indonesian women. The use of anthropometric data aims to create a design that is ergonomic, functional, and comfortable, thereby providing optimal support for the user's body. As explained by Kroemer et al. (17), anthropometry is the science of measuring human body dimensions to ensure

compatibility between products and users, with a focus on comfort and safety. Table 6 presents several anthropometric dimensions used in the design of the passenger backrest for motorcycle-based ride-hailing services.

Table 6 Anthropometric Dimensions for the Passenger Backrest of Motorcycle-Based Ride-Hailing Services

Dimension	Definition	Percentile	Justification
Thigh Length (Pp)	This dimension is measured horizontally from the outer knee to the buttocks in a seated position. It is commonly used as a basis for designing seat spacing, such as in buses or airplanes. The spacing between seats should include additional clearance to ensure that the knees do not touch the seat in front. If possible, this spacing can also facilitate easier access to enter and exit the seat.	P50	The average thigh length is used to determine the optimal distance between the seat and the backrest.
Hip Width (Lp)	This dimension is measured horizontally between the right and left hips in a seated position. One application of this measurement is to determine seat width, ensuring that even individuals with the largest hip width within the user population can comfortably use the seat.	P95	The maximum hip width is considered to ensure the design does not restrict a comfortable sitting position.

The anthropometric approach in product design considers variations in body size within the population, such as height, weight, and body width, to accommodate the majority of users by applying percentiles (P5, P50, P95). The use of these percentiles aligns with ergonomic guidelines, which direct designers to create inclusive products for diverse user groups (14). In this context, a backrest with appropriate height, width, and inclination angles based on anthropometric data reduces the risk of discomfort and injuries caused by improper seating posture during travel.

Furthermore, an anthropometry-based design ensures the optimal functionality of the backrest. For instance, a backrest with sufficient height (P95) provides support to the upper back and lumbar region. In contrast, a width that matches the average back width ensures the user does not feel constrained or uncomfortable. Adjustments to anthropometric dimensions also enhance safety, as backrests that are too low or too narrow may make users feel unstable, particularly during long journeys or on uneven terrain.

Additionally, the application of anthropometric data in product design enables manufacturers to create efficient solutions without excessive or suboptimal use of materials. As Bridger (18) highlighted, ergonomic designs based on anthropometry not only enhance user comfort but also improve production efficiency and the functional value of the product. Products designed to fit anthropometric dimensions enhance user comfort, provide a sense of security, and ultimately lead to higher levels of satisfaction. This is particularly relevant in the design of backrests for motorcycle-based ride-hailing services, where users feel valued and are more likely to continue utilizing the service.

3.3. Product Design

In developing a motorcycle-based ride-hailing passenger backrest, it is essential to integrate approaches that address both the emotional and functional needs of users. Kansei Engineering is employed to identify and translate user perceptions and emotions into design elements, while Quality Function Deployment (QFD) is utilized to map user needs into appropriate technical specifications. Additionally, ergonomics is a critical factor in ensuring user comfort and safety through the application of anthropometric data. Below is an illustration of the recommended motorcycle backrest design based on the results of Kansei and QFD data analysis.

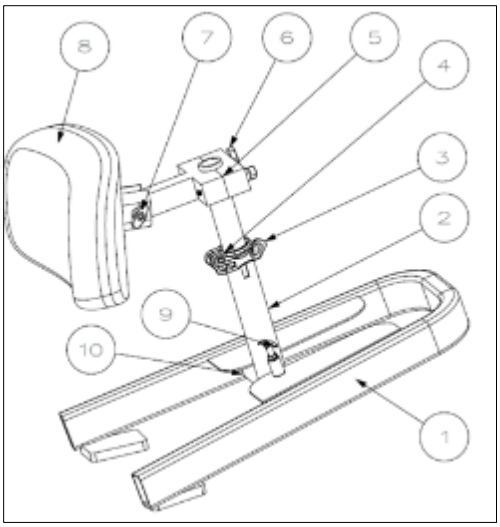

Figure 4 Motorcycle Backrest Component

3.3.1. Motorcycle Backrest Components

1. Motorcycle Backrest Bracket
2. Cushion Support (Outside)
3. Seat Post Clamp
4. Cushion Support (Inside)
5. Bracket Clamp
6. Bracket Clamp Bolt
7. Loggerhead Adjustable Knob
8. Cushion
9. Spring Latch/Locking Pin
10. Backrest Mounting Pipe

3.3.2. Dimensions and Materials Used in Motorcycle Backrest

Table 7 Motorcycle Backrest Principal Component Specifications

Component Name	Dimensions	Material
Motorcycle Backrest Bracket	413 mm x 270 mm x 40 mm	Hollow Iron
Motorcycle Backrest Support Pipe	⌀25 mm x 200 mm	Stainless Steel Pipe SS304
Cushion Support (Outside)	⌀31 mm x 170 mm	Stainless Steel Pipe SS304
Cushion Support (Inside)	⌀25 mm x 180 mm	Stainless Steel Pipe SS304
Backrest Cushion	279 mm x 158 mm x 55 mm	Sponge (Inner); Leather (Outer)

3.3.3. Motorcycle Backrest Safety Features

One of the innovations designed to enhance comfort and safety is the inclusion of safety features in the motorcycle backrest. These features are not only intended to provide ergonomic support for passengers but also to ensure security during travel. The following are the features offered by our motorcycle backrest:

- Locking Pin Feature: Allows users to adjust the position of the backrest support according to their preferences.

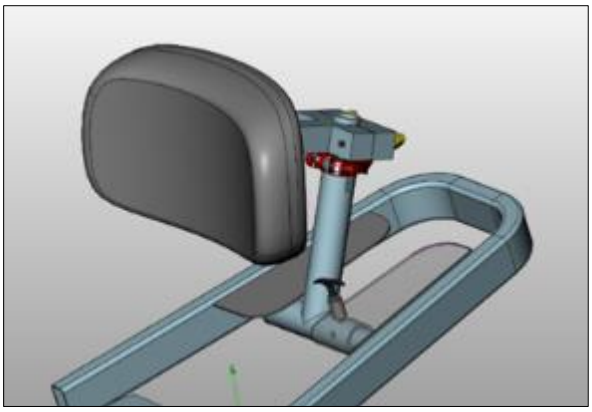

Figure 5 Locking Pin Detail

Seat Post Clamp Feature: Enables adjustment of the support pipe length, extendable up to 40 cm.

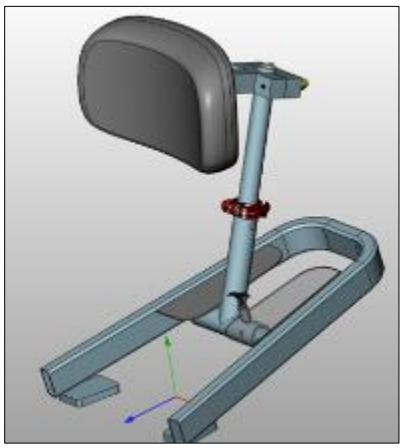

Figure 6 Seat Post Clamp Detail

Adjustable Knob Feature: Allows for 360° flexibility of the backrest cushion. With a cushion curvature radius of 250 mm (R250 mm), this feature enhances user comfort.

Figure 7 Adjustable Knob Detail

3.3.4. Motorcycle Backrest Installation Procedure

This installation procedure is designed to guide users in safely and adequately installing the motorcycle backrest, ensuring the process is carried out efficiently without compromising the product's functionality or safety. The guide includes the preparation of tools and materials, installation steps, and maintenance tips to ensure the backrest functions optimally over an extended period.

3.4. Preparation of Tools and Materials

Before beginning the installation process, several tools and components are required for installing the motorcycle backrest

- Motorcycle backrest components
- Wrenches or hex keys that match the bolt sizes
- Clean cloth

After preparing the necessary tools, double-check to ensure all components and tools are complete and that the motorcycle's mounting point is compatible with the backrest being installed. For this study, the installation is illustrated for a 2020 Honda Beat model.

3.4.1. Installation Steps

- Remove the original bracket from the motorcycle.

Figure 8 Honda Beat 2020 Illustration

- Position the motorcycle backrest bracket in place of the original bracket.
- Tighten the bolts using a wrench or hex key, ensuring the bracket is securely installed.

Figure 9 Installation of the Motorcycle Backrest Bracket

- Insert the backrest cushion support into the mounting pipe, adjust its position, and lock it in place using the provided locking mechanism.
- Attach the cushion mounting pipes to the right and left sides of the bracket, ensuring they click into place.

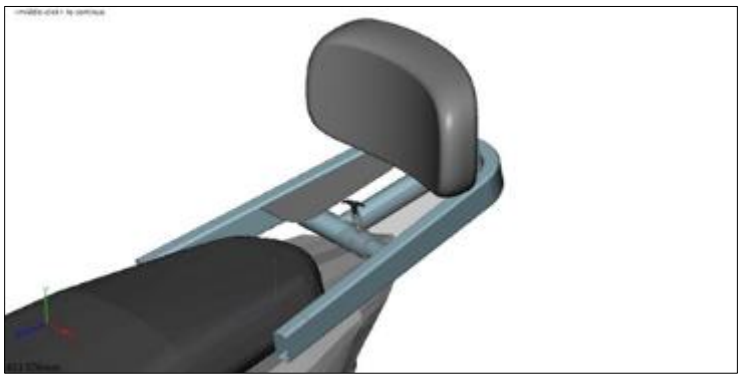

Figure 10 Assembly of Motorcycle Backrest Components

Adjust the position of the backrest cushion to suit the user's ergonomics, whether for the rider when driving alone or for the passenger.

Figure 11 Illustration of the Backrest for the Rider

Figure 12 Illustration of the Backrest for the Passenger

- Ensure all locking mechanisms for the motorcycle backrest are securely fastened.
- Clean the backrest and installation area using the provided cloth.
- Store unused tools and materials.
- Ensure that the motorcycle backrest is tested beforehand to verify its comfort and the stability of its installation.

4. Conclusion

This study developed a passenger backrest design for motorcycle-based ride-hailing services aimed at enhancing user safety, comfort, and emotional experience, particularly for female users. The Kansei Engineering method was employed to identify users' emotional needs, such as feelings of safety, comfort, and protection, which were then translated into design elements. Those are strong, portable, reliable, standard-compliant, pressure-resistant, low maintenance, clean, professional, and safe to use. Quality Function Deployment (QFD) ensured that these needs were converted into technical specifications aligned with ergonomic and anthropometric standards. The House of Quality (HoQ) analysis identified key priorities, including raw material strength, anthropometric dimensions, and cushion thickness.

The design developed in this study has not yet been prototyped; however, a survey was conducted using 3D-rendered images of the proposed design. The survey involved 30 female online ride-hailing passengers in their twenties. The results indicated that the proposed design aligns well with the Kansei words defined at the beginning of the study, confirming that the design successfully captures the intended emotional attributes. Furthermore, respondents expressed agreement that the installation of the backrest, as proposed in the design, could reduce safety risks and enhance comfort when using motorcycle-based ride-hailing services. The final design offers a practical solution to support an ergonomic sitting posture, improve stability, and reduce the risk of injuries during travel.

However, this study has several limitations, including a relatively small sample size that may affect the validity of the findings, as well as a design that does not account for cost considerations. Additionally, the study focused solely on the designing phase without further exploration of manufacturing and distribution aspects. Therefore, it is strongly recommended that future research include large-scale trials, production cost analysis, and exploration of lighter and more environmentally friendly materials. Further studies could also incorporate user preferences across more diverse demographic backgrounds to create a more inclusive design.

Compliance with ethical standards

Disclosure of conflict of interest

No conflict of interest to be disclosed.

References

[1] Hanan EN, Noorend FM, Silviana DA, Abdullah M. The Influence of Service Quality and Price on Customer Satisfaction of Gojek in the Jakarta Area. Dirgantara Management Journal. 2024 Jul;17(1).

[2] Siddiq F, Taylor BD. A gendered perspective on ride-hail uses in Los Angeles, USA. Transp Res Interdiscip Perspect. 2024 Jan; 23:100938.

[3] Astuti ES. Online Transportation and Logistics in Indonesia Post-Pandemic [Internet]. Indef.or.id; 2022 [cited 2024 Dec 10]. Available from: https://indef.or.id/wp-content/uploads/2023/03/PPT-Esther-Sri-Astuti-Hasil-Studi-Transportasi-dan-Logistik-Online-di-Indonesia-Pasca-Pandemi.pdf

[4] Priyantoro DD, Kurniawan A. Viral Video of Non-Standard Speed Bumps Causing Accidents. [Internet]. Kompas.com; 2023 [cited 2024 Dec 10]. Available from: https://otomotif.kompas.com/read/2023/05/19/064200615/video-viral-ukuran-polisi-tidur-non-standar-bikin-kecelaka

[5] Rianti E. Lost Control While Crossing a Speed Bump, One Person Killed in South Tangerang. [Internet]. Republika; 2021 [cited 2024 Dec 10]. Available from: https://news.republika.co.id/berita/r4o3xm436/hilang-kendali-saat-melintasi-polisi-tidur-tewaskan-satu-orang-di-tangsel

[6] Nagamachi M. Kansei engineering as a powerful consumer-oriented technology for product development. Appl Ergon. 2002 May;33(3):289–94.

[7] Yuji Akao. Quality function deployment: Integrating customer requirements into product design [Internet]. CRC Press; 2004

[8] Khasanan U. 7 Fuel-Efficient and Durable Automatic Motorcycles for Online Motorcycle Taxi Riders. IDN Times; 2024 [cited 2024 Dec 10]. Available from: https://www.idntimes.com/automotive/motorbike/uswatun-khasanah-52/motor-matic-untuk-ojol

[9] Akamatsu M. Handbook of Automotive Human Factors. 1st ed. Boca Raton: CRC Press; 2019.

[10] Maritan D. Practical Manual of Quality Function Deployment. 2015.

[11] Dolgun LE, Köksal G. Effective use of quality function deployment and Kansei engineering for product planning with sensory customer requirements: A plain yogurt case. Qual Eng. 2018 Oct 2;30(4):569–82.

[12] Wirahata C, Kosasih W, Salomon LL. Application of the Kansei Engineering and Quality Function Deployment (QFD) Methods in Product Quality Development of Pajamas. Jurnal Ilmiah Teknik Industri. 2023;11(3):197–209.

[13] Garvin DA. Competing on the Eight Dimensions of Quality. Presidents and Fellows of Harvard College; 1987.

[14] Pheasant S, Haslegrave CM. Bodyspace Anthropometry, Ergonomics and the Design of Work, Third Edition. 3rd ed. Boca Raton: CRC Press; 2018.

[15] Schütte R, Eklund J, Axelsson JRC, Nagamachi M. Designing Feelings into Products: Integrating Kansei Engineering Methodology in Product Development. Linköping University Electronic Press; 2002.

[16] HFES. Human Factors and Ergonomics Society standards. Human Factors and Ergonomics Society; 2007.

[17] Kroemer KHE. Fitting the Human Introduction to Ergonomics, Sixth Edition. 6th Edition. Boca Raton: CRC Press; 2008.

[18] Bridger R. Introduction to Ergonomics. 2nd ed. London: CRC Press; 2008. 1–568 p.